Domekt CF 700 H C6

Maximal air flow, m³/h	651
Maximal air flow, l/s	181
Unit weight, kg	115
Supply voltage, V	1~230
Maximal operating current, A	HE 11,7
Thermal efficiency of heat recovery, %	88
Reference flow rate, m³/s	0,127
Reference pressure difference, Pa	50
SPI, W/(m³/h)	0,29
Filters dimensions B×H×L, mm	390×300×46
Electric power input of the fan drive at reference flow rate, W	72
Electric power input of the fan drive at maximum flow rate, W	178
Electric air heater capacity, kW / Δt, °C	0,5 / 3,0
Electric preheater capacity, kW / Δt, °C	1,5 / 9,1
Maintenance space, mm	500
Control system	C6

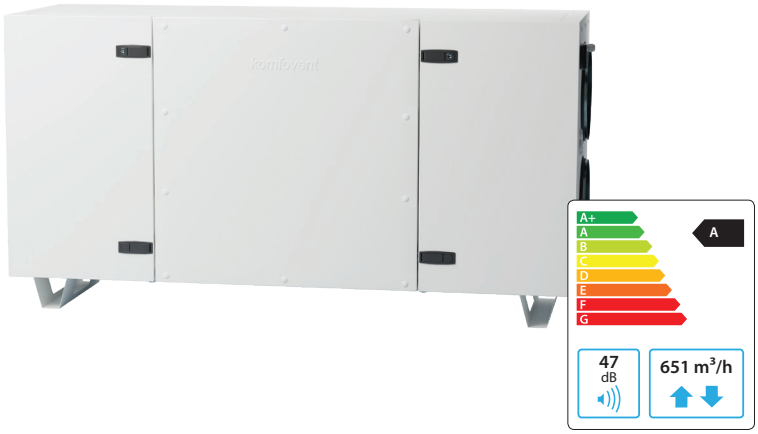

Acoustic data

A-weighted sound power level L_{WA}, dB(A) at reference flow rate

Supply inlet	47
Supply outlet	67
Exhaust inlet	47
Exhaust outlet	67
Casing	47

A-weighted sound pressure level L_{PA}, dB(A)
10 m² normally isolated room, distance from casing – 3 m.

Surroundings	36

Temperature efficiency

	Winter					Summer		
Outside temperature, °C	-23	-15	-10	-5	0	25	30	35
After heat exchanger*, °C	17,2*	17,7*	18*	18	18,8	22,4	23,2	23,9

indoor +22°C, 20 % RH.
* calculations made after evaluation of the preheater.

Performance

Unit with standard equipment

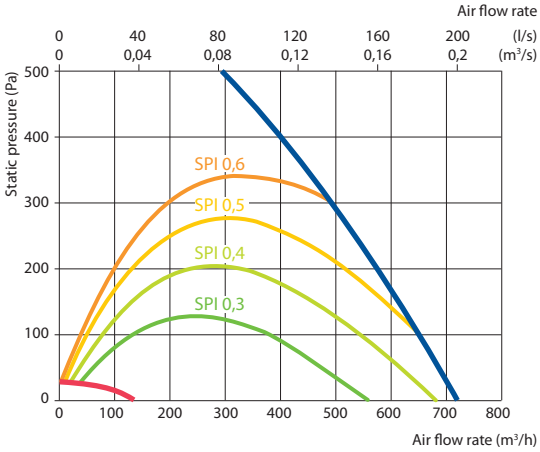

Shown as right (R1)

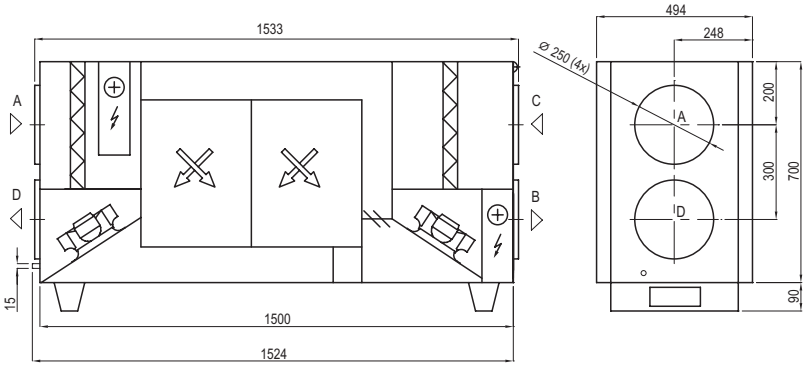

Shown as left (L1)

A outdoor intake
B supply air
C extract indoor
D exhaust air

Accessories

Closing damper		AGUJ-M-250+LF230/CM230
Silencer	A/D	AGS-250-50-600-M
	B/C	AGS-250-50-900-M
Water heater		DH-250
PPU		PPU-HW-3R-15-0,63-W2
2-way valve (heater)		VVP47.10-0,63

Water cooler	DCW-0,7-5
2-way valve (cooler)	VVP47.15-2,5
Outdoor grill	LD-250
Water heater-cooler	DHCW-250
DX cooler	DCF-0,7-5
Cooling unit	MOU-18HFN8+KA8140

C6.1

C6.2

The newest data can be verified in the latest version of selection software.
UAB KOMFOVENT reserves the right to introduce the changes of parameters and sizes in the process of improvement of the air handling units.